## STANDARD EQUIPMENT

ISO Standard cabin
- All-weather steel cab with 360° visibility
- Safety glass windows
- Rise-up type windshield wiper
- Sliding fold-in front window
- Sliding side window(LH)
- Lockable door
- Hot & cool box
- Storage compartment & Ashtray
- Cabin roof-steel cover
- Radio & USB player
- 12 volt power outlet (24V DC to 12V DC converter)

Computer aided power optimization (New CAPO) system
- 3-power mode, 2-work mode, user mode
- Auto deceleration & one-touch deceleration system
- Auto warm-up system
- Auto overheat prevention system

Automatic climate control
- Air conditioner & heater
- Defroster

Self-diagnostics system

Starting Aid (air grid heater) for cold weather

Centralized monitoring
- LCD display
- Engine speed or Trip meter/Accel.
- Clock
- Gauges
- Fuel level gauge
- Engine coolant temperature gauge
- Hyd. oil temperature gauge
- Warnings
- Check engine
- Communication error
- Low battery
- Air cleaner clogging
- Indicators
- Max power
- Low speed/High speed
- Fuel warmer
- Auto idle

Door and cab locks, one key

Two outside rearview mirrors

Fully adjustable suspension seat with seat belt

Pilot-operated slidable joystick

Four front working lights

Electric horn

Batteries (2 x 12V x100 AH)

Battery master switch

Removable clean-out screen for oil cooler

Automatic swing brake

Removable reservoir tank

Fuel pre-filter with fuel warmer

Boom holding system

Arm holding system

Accumulator for lowering work equipment

Electric transducer

Lower frame under cover (Normal)

Tires-dual (9.00-20-14PR)

Travel alarm

Rear dozer blade

## OPTIONAL EQUIPMENT

Fuel filler pump (35 L/min)

Beacon lamp

Single-acting piping kit (breaker, etc.)

Double-acting piping kit (clamshell, etc.)

Quick coupler

Travel alarm

Booms
- 4.6m, 15' 1"

Arms
- 1.9m, 6' 3"
- 2.1m, 6'11"
- 2.5m, 8' 2"
- 3.0m, 9' 10"

Cabin ROPS (ISO 12117-2)
- ROPS (Roll Over Protective Structure)

Cabin FOPS (ISO 10262 Level Ⅱ)
- FOPS (Falling Object Protective Structure)

Cabin guard-Front
- Wire net
- Fine net

Cabin lights

Cabin front window rain guard

Sun visor

Undercarriage
- Rear outrigger
- Rear dozer and front outrigger
- Rear and front outrigger
- Rear outrigger and front dozer

Lower frame under cover (Additional)

Pre-heating system, coolant

Tool kit

Operator suit

Rearview camera

Seat
- Mechanical suspension seat with heater

Tires - dual (9.00 - 20 solid)

Fenders (Mudguards)

Hi MATE (Remote Management System)

Air compressor

Precleaner

Rear work lamp

* Standard and optional equipment may vary. Contact your Hyundai dealer for more information. The machine may vary according to International standards.
* The photos may include attachments and optional equipment that are not available in your area.
* Materials and specifications are subject to change without advance notice.
* All imperial measurements rounded off to the nearest pound or inch.

HYUNDAI
CONSTRUCTION EQUIPMENT

**Head Office (Sales office)**
First tower, 55, Bundang-ro, Bundang-gu, Seongnam-si, Gyeonggi-do, Korea

PLEASE CONTACT

www.hyundai-ce.com 2020.10 Rev 3

MOVING YOU FURTHER

# Robex 140W-9S

With Tier 2 Engine installed

*Photo may include optional equipment.

HYUNDAI
CONSTRUCTION EQUIPMENT

# Pride at Work

Hyundai Construction Equipment strives to build state-of-the art earthmoving equipment to give every operator maximum performance, more precision, versatile machine preferences, and proven quality. Take pride in your work with Hyundai!

Robex 140w-9s

*Photo may include optional equipment.

## Machine Walk-Around

### Engine Technology

Proven / reliable, fuel efficient Cummins Tier Ⅱ B3.9-C engine
Low noise / Auto engine warm up feature / Anti-restart feature

### Hydraulic System Improvements

New patented hydraulic control system for improved controllability / Improved control valve design for added efficiency and smoother operation / New auto boom and swing priority system for optimum speed / New auto power boost feature for additional power when needed / Improved arm-in flow regeneration system for added speed and efficiency

### Pump Compartment

Industry-leading, powerful, reliable Kawasaki designed, variable volume in-line axial piston pumps
New compact solenoid block equipped with 3 solenoid valves, 1 EPPR valve, 1 check valve accumulator and pilot filter-controls safety lock, power boost, arm-in regeneration control, boom priority(swing logic valve control)
Remotely mounted fuel, engine oil and case drain filters for maximum convenience while servicing

### Carrier

Heavy duty carrier frame with two speed powershift transmission
Heavy duty drive line and axles / Front axle oscillation +/- 7 degrees with ram lock
Wet disc brake (front & rear) / Automatic parking brake - spring applied, hydraulically released

### Improved Steering Column

Slim-profile steering column capable of telescoping 60 mm and tilting 30 degrees

### Enhanced Operator Cab

**Improved visibility**
Enlarged cab with improved visibility
Larger right-side glass, now one piece, for better right visibility
Safety glass windows on all sides - less expensive than (polycarbonate) and won't scratch or fade
Reduced front window seam for improved operator view

**Improved Cab Construction**
New steel tube construction for added operator safety, protection and durability
New window open/close mechanism designed with cable and spring lift assist and single latch release

**Improved Suspension Seat / Console Assembly**
Ergonomic joysticks with auxiliary control buttons for attachment use, now with new sleek styling
Adjustable arm rests - turn dial to raise or lower for optimum comfort

**Advanced 7" Color Cluster**
New Color LCD Display with easy to read digital gauges for hydraulic oil temperature, water temperature, and fuel / Simplified design makes adjustment and diagnostics easier. Also, new enhanced features such as rear-view camera are integrated into monitor.
3 power modes : (P) Power, (S) Standard, (E) Economy
2 work modes : Dig & Attachment, (U) User mode for operator preference
Enhanced self-diagnostic features with GPS / satellite technology
One pump flow or two pump flow for optional attachment is now selectable through the cluster.
New anti-theft system with password capability
Boom speed and arm regeneration are selectable through the monitor.
Auto power boost is now available - selectable (on/off) through the monitor.
Powerful air conditioning and heat with auto climate control, 20% more heat and air output than 7 series!
Hi MATE (Remote Management System) works through GPS/Satellite technology to ultimately provide better customer service and support

# Preference

Operating a 9S Series is unique to every operator. Operators can fully customize their work environment and operating preferences to fit their individual needs.

*Photo may include optional equipment.

### Wide Cabin with Excellent Visibility

The newly designed cabin was conceived for more space, a wider field of view and operator comfort. Special attention was given to a clear, open and convenient interior with plenty of visibility on the machine surroundings and the job at hand. This well balanced combination of precision aspects put the operator in the perfect position to work safely and securely.

## Operator Comfort

In 9S Series cabin you can easily adjust the seat, console and armrest settings to best suit your personal operating preferences. Seat and console position can be set together and independent from each other. Improved steering wheel telescope and tilt functions provide operators improved access. A fully automatic, high capacity airconditioning system maintains a constant preferred temperature.

## Reduced Stress

Work is stressful enough. Your work environment should be stress free. Hyundai's 9S series provides improved cab amenities, additional space and a comfortable seat to minimize stress to the operator. A powerful climate control system provides the operator with optimum air temperature. An advanced audio system with USB player, AM/FM stereo is perfect for listening to music favorites.

## Operator - Friendly Cluster

The advanced new cluster with 7 inch wide color LCD screen and toggle switch allows the operator to select his personal machine preferences. Power and work mode selection, self diagnostics, optional rear-view camera, maintenance check lists, start-up machine security, and video functions were integrated into the cluster to make the machine more versatile and the operator more productive.

# Precision

Innovative hydraulic system technologies make the 9S Series excavator fast, smooth and easy to control.

*Photo may include optional equipment.

## Computer Aided Power

The engine horsepower and hydraulic horsepower together in unison through the advanced CAPO(Computer Aided Power Optimization) system, flow for the job at hand. Operator can set their own preferences for boom or swing priority, power mode selection and optional work tools at the touch of a button.
The CAPO system also provides complete self diagnostic features and digital gauges for important information like hydraulic oil temperature, water temperatures and fuel level. This system interfaces with multiple sensors placed throughout the hydraulic system as well as hydraulic flow.

### Power Mode

P (Power Max) mode maximizes machine speed and power for mass production.
S (Standard) mode provides a reduced, fixed rpm for optimum performance and improved fuel economy. For maximum fuel savings and improved control, E (Economy) mode provides precise flow based on load demand. Three unique power modes provide the operator with custom power, speed and fuel economy.

### Work Mode

The work mode allows the operator to select single flow attachments like a hydraulic breaker or bi-directional flow attachments like a crusher. Flow settings unique to each attachment can be programmed from within the cluster.

### User Mode

Some jobs require more precise machine settings. Using the versatile U (User) mode, the operator can customize engine speed, pump output, idle speed and other machine settings for the job at hand.

## Improved Hydraulic System

To achieve optimum precision, Hyundai redesigned the hydraulic system to provide the operator with super fine touch and improved controllability. Improved pump flow control reduces flow when controls are not being used to minimize fuel consumption.
Improved spool valves in the control valve are engineered to provide more precise flow to each function with less effort.
Improved hydraulic valves, precision-designed variable volume piston pumps, fine-touch pilot controls, and enhanced travel functions make any operator running a 9S Series look like a smooth operator. Newly improved features include arm-in and boom-down flow regeneration, improved control valve technology and innovative auto boom and swing priority for optimal performance in any application.

## Auto Boom-swing Priority

This smart function automatically and continuously looks the ideal hydraulic flow balance for the boom and swing motions of the machine. The advanced CAPO system monitors the hydraulic system and adjusts its settings to maximize performance and productivity.

# Performance

9S Series is designed for maximum performance to keep the operator working productively.

*Photo may include optional equipment.

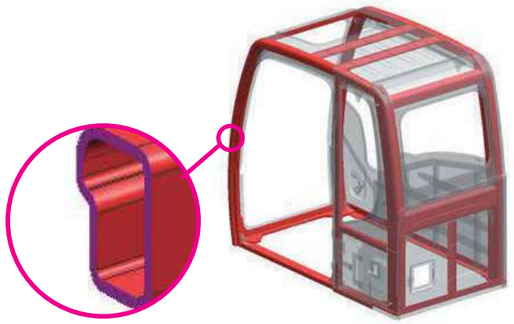

## Structural Strength

The 9S series cabin structure has been fitted with stronger but slimmer tubing for more safety an better visibility Low-stress and high strength steel was integrally welded to form a strong and stable lower frame. Structural durability was evaluated and tested by means of FEM (Finite Elements Method) analysis and long-term durability tests.
The optional ROPS(Roll Over Protective Structure) cab can be equipped to enhance operator safety.

## Improved Durability

9S series excavators are equipped with stainless spring guards to protect the hoses from external damages. Both dozer and outrigger are equipped with cylinder guards for added protection.

## New Auto Ram Lock System

During not traveling in work-mode, a new auto ram lock system is available to improve operating safety.

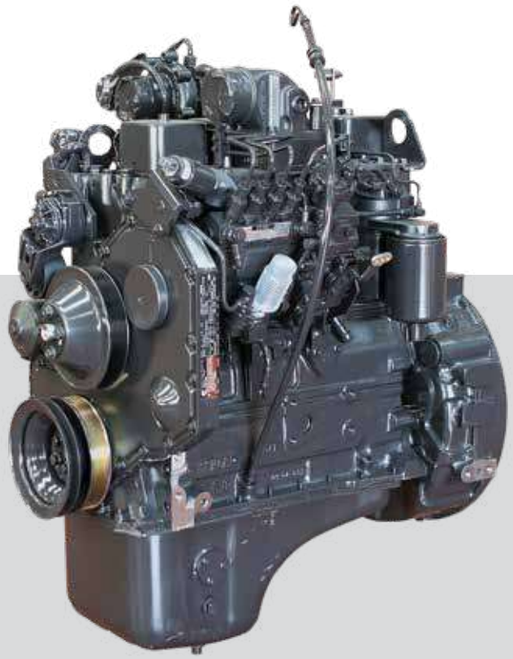

## CUMMINS B3.9C ENGINE

The Cummins B3.9-C engine has been designed with 40% fewer parts than the competitors. That means there's less that can go wrong when you need it most. It also means fewer parts to inventory. Repairs are simplified because no special tools are needed for maintenance. The weight of the machine is reduced without sacrificing strength.
The B3.9-C engine is capable of reaching emission standards without electronic engine controls. You get a proven power plant that meets ecological concerns, without paying a premium for technology you don't need.

# Profitability

9S Series is designed to maximize profitability through improved efficiencies, enhanced service features and longer life components.

*Photo may include optional equipment.

## Fuel Efficiency

9S Series excavators are engineered to be extremely fuel efficient. New innovations like two-stage auto decel system and the new economy mode help to conserve fuel and reduce the impact on the environment.

## Hi MATE (Remote Management System)

Hi MATE, Hyundai's proprietary remote management system, provides operators and dealer service personnel access to vital service and diagnostic information on the machine from any computer with internet access. Users can pinpoint machine location using digital mapping and set machine work boundaries, reducing the need for multiple service calls. Hi MATE saves time and money for the owner and dealer by promoting preventative maintenance and reducing machine downtime.

## Easy Access

Ground-line access to filters, lube fittings, fuses, machine computer components and wide open compartments makes service more convenient on the 9S Series.

## Long-Life Components

9S series excavators were designed with bushings designed for long-life lube intervals (250 hrs) & polymer shims (wear resistant, noise reducing), long-life hydraulic filters (1,000hrs), long-life hydraulic oil (5,000hrs), more efficient cooling systems and integrated preheating systems which extend service intervals, minimize operating costs and reduce machine down time.

# Specifications

## ENGINE

| | | | |
|---|---|---|---|
| MODEL | | | Cummins B3.9-C |
| Type | | | Water cooled, 4 cycle diesel, 4-cylinders in line, direct injection, turbocharged, charger air cooled, low emission |
| Rated flywheel horsepower | SAE | J1995 (gross) | 113 HP (84 kW) at 2100 rpm |
| | | J1349 (net) | 105 HP (78 kW) at 2100 rpm |
| | DIN | 6271/1 (gross) | 115 PS (84 kW) at 2100 rpm |
| | | 6271/1 (net) | 106 PS (78 kW) at 2100 rpm |
| Max. torque | | | 45.6 kgf·m (330lbf·ft) / 1,500 rpm |
| Bore X stroke | | | 102 mm X 120 mm (4.02" X 4.72") |
| Piston displacement | | | 3,900cc (238 in³) |
| Batteries | | | 2 x 12 V x 100 AH |
| Starting motor | | | 24V, 4.5 kW |
| Alternator | | | 24V, 70 Amp |

## HYDRAULIC SYSTEM

| MAIN PUMP | |
|---|---|
| Type | Two variable displacement piston pumps |
| Rated flow | 2 X 130 L /min (34.3 US gpm/28.6 UK gpm) |
| Sub-pump for pilot circuit | Gear pump |

Cross-sensing and fuel saving pump system

| HYDRAULIC MOTORS | |
|---|---|
| Travel | Axial piston motor with brake valve |
| Swing | Axial piston motor with automatic brake |

| RELIEF VALVE SETTING | |
|---|---|
| Implement circuits | 350 kgf/cm² (4,970 psi) |
| Travel | 380 kgf/cm² (5,400 psi) |
| Power boost (boom, arm, bucket) | 380 kgf/cm² (5,400 psi) |
| Swing circuit | 285 kgf/cm² (4,050 psi) |
| Pilot circuit | 40 kgf/cm² (570 psi) |
| Service valve | Installed |

| HYDRAULIC CYLINDERS | |
|---|---|
| No. of cylinder bore X stroke | Boom : 2-105 x 1,075 mm (4.1" x 42.3") |
| | Arm : 1-115 x 1,138 mm (4.5" x 46.8") |
| | Bucket : 1-100 x 840 mm (3.9" x 33.1") |
| | Blade : 2-100 x 236 mm (3.9" x 9.3") |
| | Outrigger : 2-110 x 446 mm (4.3" x 7.6") |

## DRIVES & BRAKES

4-wheel hydrostatic drive. Constant mesh, helical gear transmission provides 2 forward and reverse travel speeds.

| | | |
|---|---|---|
| Max. drawbar pull | | 8,500 kgf (18,740 lbf) |
| travel speed | 1st | 8 km/h (5.0 mph) |
| | 2nd | 30 km/h (18.6 mph) |
| Gradeability | | 35º (70 %) |

Service Brake :
- Independent dual brake, front and rear axle full hydraulic power brake.
- Spring released and hydraulic applied wet type multiple disc brake.

Parking Brake :
- Spring applied and hydraulic released wet disc brake type in transmission.

## CONTROL

Pilot pressure operated joysticks and pedals with detachable lever provide almost effortless and fatigueless operation.

| | |
|---|---|
| Pilot control | Two joysticks with one safety lever (LH): Swing and arm, (RH): Boom and bucket (ISO) |
| Engine throttle | Electric, Dial type |

## AXLE & WHEEL

Full floating front axle is supported by center pin for ocillation. It can be locked by ocillation lock cylinders. Rear axle is fixed on the lower chassis.

| | |
|---|---|
| Tires | 9.00-20-14PR, Dual(tube type) |
| (optional) | 9.00-20, Dual(solid type) |

## SWING SYSTEM

| | |
|---|---|
| Swing motor | Axial pistons motor |
| Swing reduction | Planetary gear reduction |
| Swing bearing lubrication | Grease-bathed |
| Swing brake | Multi wet disc(pin lock type) |
| Swing speed | 12.9 rpm |

## STEERING SYSTEM

Hydraulically actuated, orbitrol type steering system actuates on front wheels through the steering cylinders.

| | |
|---|---|
| Min. turning radius | 6,300 mm(20' 8") |

## COOLANT & LUBRICANT CAPACITY

| Refilling | | liter | US gal | UK gal |
|---|---|---|---|---|
| Fuel tank | | 270.0 | 71.3 | 59.4 |
| Engine coolant | | 17.5 | 4.6 | 3.8 |
| Engine oil | | 15.3 | 4.0 | 3.4 |
| Swing device - gear oil | | 2.5 | 0.7 | 0.5 |
| Axle | Front | 13.8 | 3.6 | 3.0 |
| | Rear | 16.0 | 4.2 | 3.5 |
| Hydraulic system (including tank) | | 210.0 | 55.5 | 46.2 |
| Hydraulic tank | | 124.0 | 32.8 | 27.3 |

## UNDERCARRIAGE

Reinforced box-section frame is all-welded, low-stress.
Dozer blade and outriggers are available. A pin-on design.

| | |
|---|---|
| Dozer blade | A very useful addition for leveling and back filling or clean-up work. |
| Outrigger | Indicated for max. operation stabillity when digging and lifting. Can be mounted on the front/or the rear. |

## OPERATING WEIGHT (APPROXIMATE)

Operating weight, including 4,600mm (15' 1") One-piece boom, 2,100mm (6' 11") arm, SAE heaped 0.58 m³ (0.76 yd³) backhoe bucket, lubricant, coolant, full fuel tank, hydraulic tank and the standard equipment.

| MAJOR COMPONENT WEIGHT | |
|---|---|
| Upperstructure | 4,680kg (10,320 lb) |
| Mono boom(with arm cylinder) | 1,030kg (2,270 lb) |

| OPERATING WEIGHT | |
|---|---|
| Undercarriage | Mono boom |
| Rear dozer blade | 13,700kg (30,200 lb) |
| Rear outrigger | 14,100kg (31,090 lb) |
| Front outrigger and rear blade | 14,700kg (32,410 lb) |
| Front blade and rear outrigger | 14,700kg (32,410 lb) |
| Four outrigger | 15,100kg (33,290 lb) |

## AIR CONDITIONING SYSTEM

The air condition system for the machine contains the fluorinated greenhouse gas with global warming potential of R134a. ( Global Warming Potential : 1430 )
The system hold 0.75kg refrigerant consisting of a $CO_2$ equivalent 1.07kg metric tonne.
For more information, Please refer to the manual.

## BUCKETS

All buckets are welded with high-strength steel.

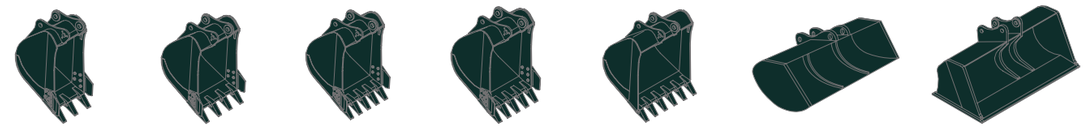

0.23 (0.30) | 0.40 (0.52) 0.46 (0.60) | 0.52 (0.68) 0.58 (0.76) | 0.65 (0.85) | 0.71 (0.93) | ▣ 0.45 (0.59) | ⦿ 0.55 (0.72)

SAE heaped m³ (yd³)

| Capacity m³ (yd³) | | Width mm (in) | | Weight kg (lb) | Recommendation mm (ft·in) | | | |
|---|---|---|---|---|---|---|---|---|
| | | | | | 4.6 (15' 1") Boom | | | |
| SAE heaped | CECE heaped | Without sidecutters | With sidecutters | | 1.9 (6' 3") Arm | 2.1 (6' 11") Arm | 2.5 (8' 2") Arm | 3.0 (9' 10") Arm |
| 0.23 (0.30) | 0.20(0.26) | 520(20.5) | 620(24.4) | 335(740) | ● | ● | ● | ● |
| 0.40 (0.52) | 0.35(0.46) | 750(29.5) | 850(33.5) | 410(900) | ● | ● | ● | ● |
| 0.46 (0.60) | 0.40(0.52) | 840(33.1) | 940(37.0) | 435(960) | ● | ● | ● | ■ |
| 0.52 (0.68) | 0.45(0.59) | 915(36.0) | 1,015(40.0) | 460(1,010) | ● | ● | ■ | ▲ |
| 0.58 (0.76) | 0.50(0.65) | 1,000(39.4) | 1,100(43.3) | 480(1,060) | ● | ■ | ■ | ▲ |
| 0.65 (0.85) | 0.55(0.72) | 1,105(43.5) | 1,205(47.4) | 500(1,100) | ■ | ▲ | ▲ | – |
| 0.71 (0.93) | 0.60(0.78) | 1,190(46.9) | 1,290(50.8) | 540(1,190) | ▲ | ▲ | – | – |
| ▣ 0.45 (0.59) | 0.40(0.52) | 1,520(59.8) | 1,620(63.8) | 410(900) | ● | ● | ■ | – |
| ⦿ 0.55 (0.72) | 0.45(0.59) | 1,800(70.9) | 1,900(74.8) | 585(1,290) | ■ | ▲ | ▲ | – |

▣ Ditching bucket
⦿ Heavy duty bucket

●: Applicable for materials with density of 2,000 kg /m³ (3,370 lb/ yd³) or less
■: Applicable for materials with density of 1,600 kg /m³ (2,700 lb/ yd³) or less
▲: Applicable for materials with density of 1,100 kg /m³ (1,850 lb/ yd³) or less

## ATTACHMENT

Booms and arms are welded with a low-stress, full-box section design. 4.6m (15' 1") Boom and 1.9m (6' 3"), 2.1m (6' 11"), 2.5m (8' 2"), & 3.0m (9' 10") Arms are available.

## DIGGING FORCE

| | | | | | | | |
|---|---|---|---|---|---|---|---|
| Boom | Length | mm (ft·in) | 4,600 (15' 1") | | | | Remarks |
| | Weight | kg (lb) | 1,030 (2,270) | | | | |
| Arm | Length | mm (ft·in) | 1,900 (6' 3") | 2,100 (6' 11") | 2,500 (8' 2") | 3,000 (9' 10") | |
| | Weight | kg (lb) | 560 (1,230) | 580 (1,280) | 610 (1,340) | 670 (1,480) | |
| Bucket digging force | SAE | kN | 87.3 [94.8] | 87.3 [94.8] | 87.3 [94.8] | 87.3[94.8] | [ ]: Power Boost |
| | | kgf | 8,900 [9,660] | 8,900 [9,660] | 8,900 [9,660] | 8,900[9,660] | |
| | | lbf | 19,620 [21,300] | 19,620 [21,300] | 19,620 [21,300] | 19,620[21,300] | |
| | ISO | kN | 102 [110.8] | 102 [110.8] | 102 [110.8] | 102[110.8] | |
| | | kgf | 10,400 [11,290] | 10,400 [11,290] | 10,400 [11,290] | 10,400[11,290] | |
| | | lbf | 22,930 [24,890] | 22,930 [24,890] | 22,930 [24,890] | 22,930[24,890] | |
| Arm crowd force | SAE | kN | 76.5 [83.1] | 73.6 [79.9] | 62.8 [68.2] | 55.9[60.7] | |
| | | kgf | 7,800 [8,470] | 7,500 [8,140] | 6,400[6,950] | 5,700[6,190] | |
| | | lbf | 17,200 [18,670] | 16,530 [17,950] | 14,110[15,320] | 12,570[13,640] | |
| | ISO | kN | 80.4 [87.3] | 77.5 [84.1] | 65.7[71.4] | 57.9[62.8] | |
| | | kgf | 8,200 [8,900] | 7,900 [8,580] | 6,700[7,270] | 5,900[6,410] | |
| | | lbf | 18,080 [19,630] | 17,420 [18,910] | 14,770[16,040] | 13,010[14,120] | |

Note : Boom weight includes arm cylinder, piping, and pin
Arm weight includes bucket cylinder, linkage, and pin

# Dimensions & Working Range

## R140W-9S DIMENSIONS

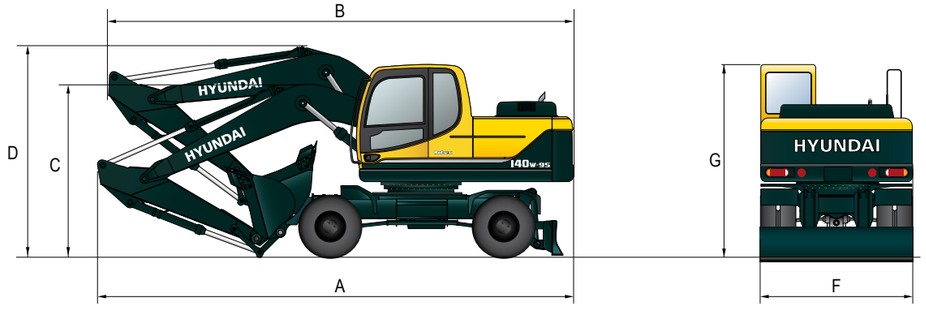


Unit : mm (ft·in)

| | | | | | |
|---|---|---|---|---|---|
| | Mono Boom | 4,600(15′ 1″) | | | |
| | Arm | 1,900 (6′ 3″) | 2,100 (6′ 11″) | 2,500 (8′ 2″) | 3,000 (9′ 10″) |
| A | Overall length of shipping position | 7,760 (25′ 6″) | 7,820 (25′ 8″) | 7,770 (25′ 6″) | 7,830 (25′ 8″) |
| B | Overall length of traveling position | 7,750 (25′ 5″) | 7,760 (25′ 6″) | 7,690 (25′ 3″) | 7,710 (25′ 4″) |
| C | Height of attachment(shipping position) | 2,760 (9′ 1″) | 2,860 (9′ 5″) | 2,810 (9′ 3″) | 3,100 (10′ 2″) |
| D | Height of attachment(traveling position) | 3,500 (11′ 6″) | 3,500 (11′ 6″) | 3,620 (11′ 11″) | 3,600 (11′ 10″) |
| F | Overall width | 2,500 (8′ 2″) | 2,500 (8′ 2″) | 2,500 (8′ 2″) | 2,500 (8′ 2″) |
| G | Height of cabin | 3,140 (10′ 4″) | 3,140 (10′ 4″) | 3,140 (10′ 4″) | 3,140 (10′ 4″) |

## R140W-9S WORKING RANGE

Unit : mm (ft·in)

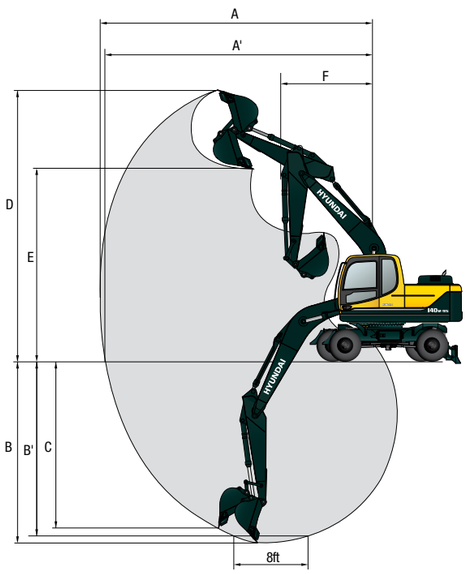


| | | | | | |
|---|---|---|---|---|---|
| | Boom length | 4,600 (15′ 1″) | | | |
| | Arm length | 1,900 (6′ 3″) | 2,100 (6′ 11″) | 2,500 (8′ 2″) | 3,000 (9′ 10″) |
| A | Max. digging reach | 7,750 (25′ 5″) | 7,920 (26′ 0″) | 8,320 (27′ 4″) | 8,790 (28′ 10″) |
| A' | Max. digging reach on ground | 7,530 (24′ 8″) | 7,700 (25′ 3″) | 8120 (26′ 8″) | 8,590 (28′ 2″) |
| B | Max. digging depth | 4,650 (15′ 3″) | 4,850 (15′ 11″) | 5,250 (17′ 3″) | 5,750 (18′ 10″) |
| B' | Max. digging depth (8' level) | 4,390 (14′ 5″) | 4,600 (15′ 1″) | 5,040 (16′ 6″) | 5,570 (18′ 3″) |
| C | Max. vertical wall digging depth | 4,350 (14′ 3″) | 4,460 (14′ 8″) | 5,030 (16′ 6″) | 5,550 (18′ 3″) |
| D | Max. digging height | 8,400 (27′ 7″) | 8,470 (27′ 9″) | 8,790 (28′ 10″) | 9,070 (29′ 9″) |
| E | Max. dumping height | 5,960 (19′ 7″) | 6,040 (19′ 10″) | 6,350 (20′ 10″) | 6,620 (21′ 9″) |
| F | Min. swing radius | 2,620 (8′ 7″) | 2,670 (8′ 10″) | 2,650 (8′ 8″) | 2,670 (8′ 9″) |

# Undercarriage

### R140W-9S WITH REAR DOZER

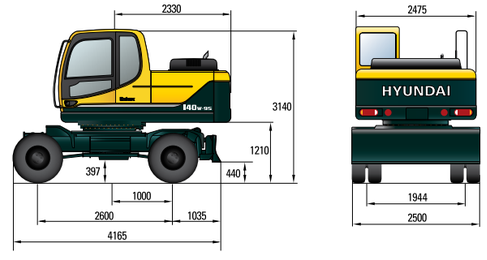


### R140W-9S WITH REAR OUTRIGGER

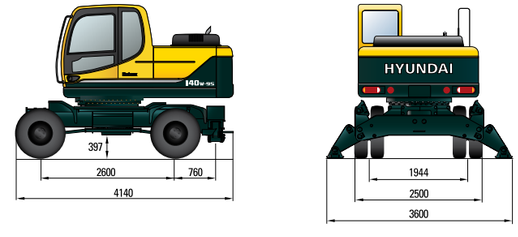


### R140W-9S WITH REAR DOZER AND FRONT OUTRIGGER

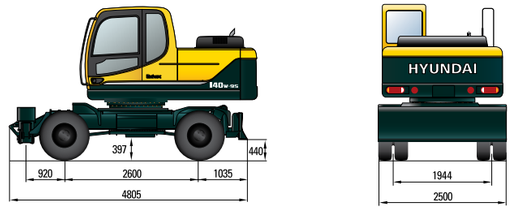


### R140W-9S WITH REAR AND FRONT OUTRIGGER

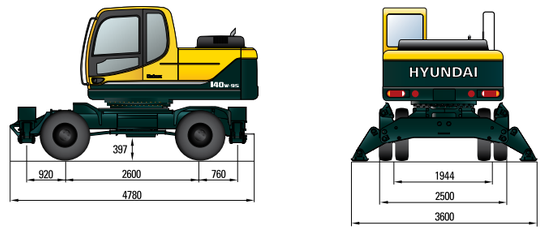


### R140W-9S WITH REAR OUTRIGGER AND FRONT DOZER

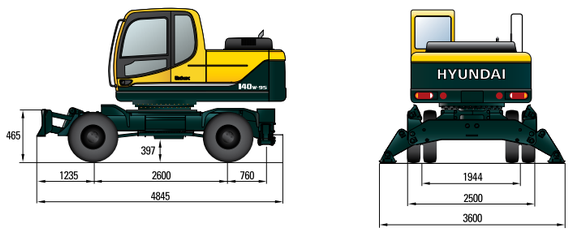

# Lifting Capacity

## R140W-9S MONO BOOM

Rating over-front | Rating over-side or 360 degree

Boom : 4.6 m (15' 1") / Arm : 1.9 m (6' 3") / Bucket : 0.58 m³ (0.76 yd³) SAE heaped / With rear dozer blade down

| Load point height m (ft) | | Load radius | | | | | | | | At max. reach | | |
|---|---|---|---|---|---|---|---|---|---|---|---|---|
| | | 1.5 m (5 ft) | | 3.0 m (10 ft) | | 4.5 m (15 ft) | | 6.0 m (20 ft) | | Capacity | | Reach |
| | | | | | | | | | | | | m (ft) |
| 6.0 m | kg | | | | | *3,350 | *3,350 | | | *3,200 | 2,080 | 6.22 |
| (20 ft) | lb | | | | | *7,390 | *7,390 | | | *7,050 | 4,590 | (20.4) |
| 4.5 m | kg | | | | | *3,740 | 3,550 | *2,860 | 2,120 | *3,310 | 1,610 | 7.05 |
| (15 ft) | lb | | | | | *8,250 | 7,830 | *6,310 | 4,670 | *7,300 | 3,550 | (23.1) |
| 3.0m | kg | | | *7,070 | 6,400 | *4,710 | 3,330 | *3,900 | 2,050 | 3,370 | 1,420 | 7.42 |
| (10 ft) | lb | | | *15,590 | 14,110 | *10,380 | 7,340 | *8,600 | 4,520 | 7,430 | 3,130 | (24.3) |
| 1.5 m | kg | | | *7,620 | 5,740 | *5,750 | 3,090 | *4,340 | 1,960 | 3,320 | 1,380 | 7.42 |
| (5 ft) | lb | | | *16,800 | 12,650 | *12,680 | 6,810 | *9,570 | 4,320 | 7,320 | 3,040 | (24.3) |
| Ground | kg | | | *8,960 | 5,590 | *6,340 | 2,940 | *4,600 | 1,890 | 3,590 | 1,480 | 7.06 |
| Line | lb | | | *19,750 | 12,320 | *13,980 | 6,480 | *10,140 | 4,170 | 7,910 | 3,260 | (23.2) |
| -1.5 m | kg | *7,690 | *7,690 | *9,450 | 5,620 | *6,250 | 2,920 | | | *3,860 | 1,830 | 6.24 |
| (-5 ft) | lb | *16,950 | *16,950 | *20,830 | 12,390 | *13,780 | 6,440 | | | *8,510 | 4,030 | (20.5) |
| -3.0 m | kg | | | *7,750 | 5,800 | *5,020 | 3,030 | | | | | |
| (-10 ft) | lb | | | *17,090 | 12,790 | *11,070 | 6,680 | | | | | |

# Lifting Capacity

## R140W-9S MONO BOOM

Rating over-front | Rating over-side or 360 degree

Boom : 4.6 m (15' 1") / Arm : 2.1 m (6' 11") / Bucket : 0.58 m³ (0.76 yd³) SAE heaped / With rear dozer blade down

| Load point height m (ft) | | Load radius | | | | | | | | At max. reach | | |
|---|---|---|---|---|---|---|---|---|---|---|---|---|
| | | 1.5 m (5 ft) | | 3.0 m (10 ft) | | 4.5 m (15 ft) | | 6.0 m (20 ft) | | Capacity | | Reach |
| | | | | | | | | | | | | m (ft) |
| 6.0 m | kg | | | | | *3,130 | *3,130 | | | *3,050 | 1,950 | 6.43 |
| (20 ft) | lb | | | | | *6,900 | *6,900 | | | *6,720 | 4,300 | (21.1) |
| 4.5 m | kg | | | | | *3,540 | *3,540 | *3,210 | 2,120 | *3,160 | 1,520 | 7.23 |
| (15 ft) | lb | | | | | *7,800 | *7,800 | *7,080 | 4,670 | *6,970 | 3,350 | (23.7) |
| 3.0m | kg | | | *6,620 | 6,450 | *4,510 | 3,310 | *3,770 | 2,040 | 3,230 | 1,340 | 7.59 |
| (10 ft) | lb | | | *14,590 | 14,220 | *9,940 | 7,300 | *8,310 | 4,500 | 7,120 | 2,950 | (24.9) |
| 1.5 m | kg | | | *8,650 | 5,730 | *5,580 | 3,060 | *4,230 | 1,930 | 3,180 | 1,300 | 7.59 |
| (5 ft) | lb | | | *19,070 | 12,630 | *12,300 | 6,750 | *9,330 | 4,250 | 7,010 | 2,870 | (24.9) |
| Ground | kg | | | *9,090 | 5,510 | *6,240 | 2,900 | *4,540 | 1,860 | 3,420 | 1,390 | 7.24 |
| Line | lb | | | *20,040 | 12,150 | *13,760 | 6,390 | *10,010 | 4,100 | 7,540 | 3,060 | (23.8) |
| -1.5 m | kg | *7,380 | *7,380 | *9,530 | 5,530 | *6,240 | 2,860 | | | *3,760 | 1,700 | 6.45 |
| (-5 ft) | lb | *16,270 | *16,270 | *21,010 | 12,190 | *13,760 | 6,310 | | | *8,290 | 3,750 | (21.2) |
| -3.0 m | kg | *11,710 | *11,710 | *7,990 | 5,690 | *5,240 | 2,950 | | | | | |
| (-10 ft) | lb | *25,820 | *25,820 | *17,610 | 12,540 | *11,550 | 6,500 | | | | | |

# Lifting Capacity

## R140W-9S MONO BOOM

Rating over-front | Rating over-side or 360 degree

Boom : 4.6 m (15' 1") / Arm : 2.5 m (8' 2") / Bucket : 0.58 m³ (0.76 yd³) SAE heaped / With rear dozer blade down

| Load point height m (ft) | | Load radius | | | | | | | | At max. reach | | |
|---|---|---|---|---|---|---|---|---|---|---|---|---|
| | | 1.5 m (5 ft) | | 3.0 m (10 ft) | | 4.5 m (15 ft) | | 6.0 m (20 ft) | | Capacity | | Reach |
| | | | | | | | | | | | | m (ft) |
| 6.0 m | kg | | | | | | | | | *2,820 | 1,700 | 6.92 |
| (20 ft) | lb | | | | | | | | | *6,220 | 3,750 | (22.7) |
| 4.5 m | kg | | | | | *3,110 | *3,110 | *2,980 | 2,150 | *2,880 | 1,360 | 7.66 |
| (15 ft) | lb | | | | | *6,860 | *6,860 | *6,570 | 4,740 | *6,350 | 3,000 | (25.1) |
| 3.0m | kg | | | *5,700 | *5,700 | *4,110 | 3,360 | *3,500 | 2,050 | *2,930 | 1,200 | 8.00 |
| (10 ft) | lb | | | *12,570 | *12,570 | *9,060 | 7,410 | *7,720 | 4,520 | *6,460 | 2,650 | (26.2) |
| 1.5 m | kg | | | *8,610 | 5,850 | *5,270 | 3,080 | *4,030 | 1,930 | 2,900 | 1,160 | 8.00 |
| (5 ft) | lb | | | *18,980 | 12,900 | *11,620 | 6,790 | *8,880 | 4,250 | 6,390 | 2,560 | (26.2) |
| Ground | kg | *3,820 | *3,820 | *9,000 | 5,500 | *6,070 | 2,890 | *4,430 | 1,830 | 3,090 | 1,240 | 7.67 |
| Line | lb | *8,420 | *8,420 | *19,840 | 12,130 | *13,380 | 6,370 | *9,770 | 4,030 | 6,810 | 2,730 | (25.2) |
| -1.5 m | kg | *6,470 | *6,470 | *9,740 | 5,460 | *6,260 | 2,820 | *4,470 | 1,800 | *3,510 | 1,480 | 6.94 |
| (-5 ft) | lb | *14,260 | *14,260 | *21,470 | 12,040 | *13,800 | 6,220 | *9,850 | 3,970 | *7,740 | 3,260 | (22.8) |
| -3.0 m | kg | *9,750 | *9,750 | *8,560 | 5,580 | *5,620 | 2,870 | | | *3,480 | 2,150 | 22.8 |
| (-10 ft) | lb | *21,500 | *21,500 | *18,870 | 12,300 | *12,390 | 6,330 | | | *7,670 | 4,740 | (18.5) |

1. Lifting capacity is based on ISO 10567.
2. Lifting capacity of the Robex Series does not exceed 75% of the tipping load with the machine on firm, level ground or 87% of full hydraulic capacity.
3. The load point is a hook located on the back of the bucket.
4. (*) indicates the load limited by hydraulic capacity.

# Lifting Capacity

## R140W-9S MONO BOOM

Rating over-front | Rating over-side or 360 degree

Boom : 4.6 m (15' 1") / Arm : 3.0 m (9' 10") / Bucket : 0.58 m³ (0.76 yd³) SAE heaped / With rear dozer blade down

| Load point height m (ft) | | Load radius | | | | | | | | | | At max. reach | | |
|---|---|---|---|---|---|---|---|---|---|---|---|---|---|---|
| | | 1.5 m (5 ft) | | 3.0 m (10 ft) | | 4.5 m (15 ft) | | 6.0 m (20 ft) | | 7.5 m (25 ft) | | Capacity | | Reach |
| | | | | | | | | | | | | | | m (ft) |
| 6.0 m | kg | | | | | | | *2,100 | *2,100 | | | *2,570 | 1,480 | 7.46 |
| (20 ft) | lb | | | | | | | *4,630 | *4,630 | | | *5,670 | 3,260 | (24.5) |
| 4.5 m | kg | | | | | | | *2,710 | 2,200 | | | *2,590 | 1,210 | 8.14 |
| (15 ft) | lb | | | | | | | *5,970 | 4,850 | | | *5,710 | 2,670 | (26.7) |
| 3.0m | kg | | | | | *3,580 | 3,450 | *3,170 | 2,090 | *1,780 | 1,350 | *2,640 | 1,080 | 8.46 |
| (10 ft) | lb | | | | | *7,890 | 7,610 | *6,990 | 4,610 | *3,920 | 2,980 | *5,820 | 2,380 | (27.8) |
| 1.5 m | kg | | | *7,700 | 6,080 | *4,840 | 3,150 | *3,770 | 1,960 | *2,190 | 1,290 | 2,640 | 1,040 | 8.46 |
| (5 ft) | lb | | | *16,980 | 13,400 | *10,670 | 6,940 | *8,310 | 4,320 | *4,830 | 2,840 | 5,820 | 2,290 | (27.8) |
| Ground | kg | *3,780 | *3,780 | *9,530 | 5,580 | *5,830 | 2,920 | *4,280 | 1,840 | *1,820 | 1,250 | 2,780 | 1,100 | 8.15 |
| Line | lb | *8,330 | *8,330 | *21,010 | 12,300 | *12,850 | 6,440 | *9,440 | 4,060 | *4,010 | 2,760 | 6,130 | 2,430 | (26.7) |
| -1.5 m | kg | *5,830 | *5,830 | *9,890 | 5,450 | *6,250 | 2,810 | *4,490 | 1,780 | | | 3,210 | 1,280 | 7.48 |
| (-5 ft) | lb | *12,850 | *12,850 | *21,800 | 12,020 | *13,780 | 6,190 | *9,900 | 3,920 | | | 7,080 | 2,820 | (24.5) |
| -3.0 m | kg | *8,470 | *8,470 | *9,150 | 5,500 | *5,950 | 2,820 | *3,320 | 1,810 | | | *3,390 | 1,750 | 6.31 |
| (-10 ft) | lb | *18,670 | *18,670 | *20,170 | 12,130 | *13,120 | 6,220 | *7,320 | 3,990 | | | *7,470 | 3,860 | (20.7) |
| -4.5 m | kg | | | *6,890 | 5,740 | | | | | | | | | |
| (-15 ft) | lb | | | *15,190 | 12,650 | | | | | | | | | |

1. Lifting capacity is based on ISO 10567.
2. Lifting capacity of the Robex Series does not exceed 75% of the tipping load with the machine on firm, level ground or 87% of full hydraulic capacity.
3. The load point is a hook located on the back of the bucket.
4. (*) indicates the load limited by hydraulic capacity.